Turn Signal and Hazard Warning Light

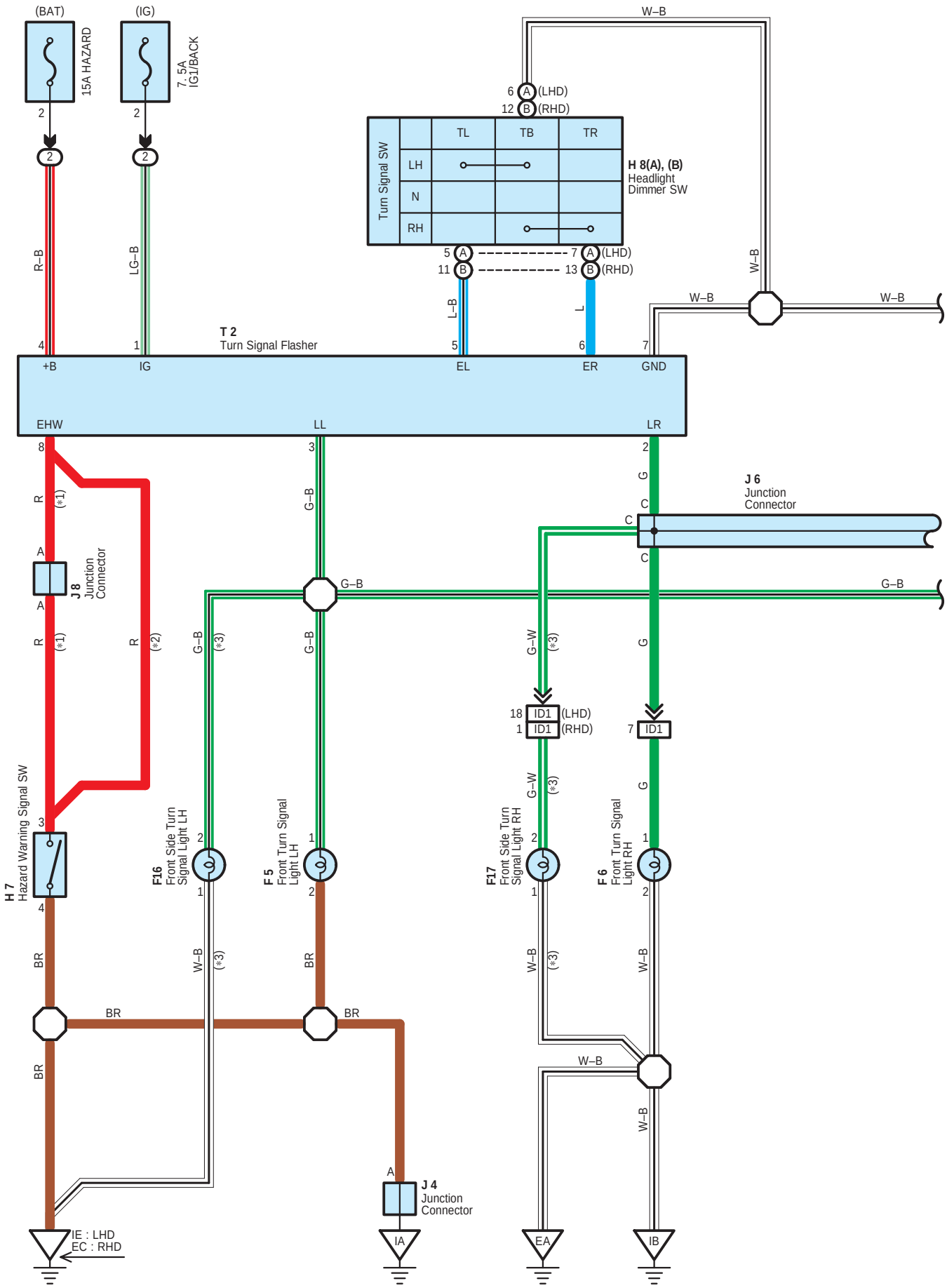

* 1 : w/ Wireless Door Lock Control
* 2 : w/o Wireless Door Lock Control
* 3 : w/ Front Side Turn Signal Light

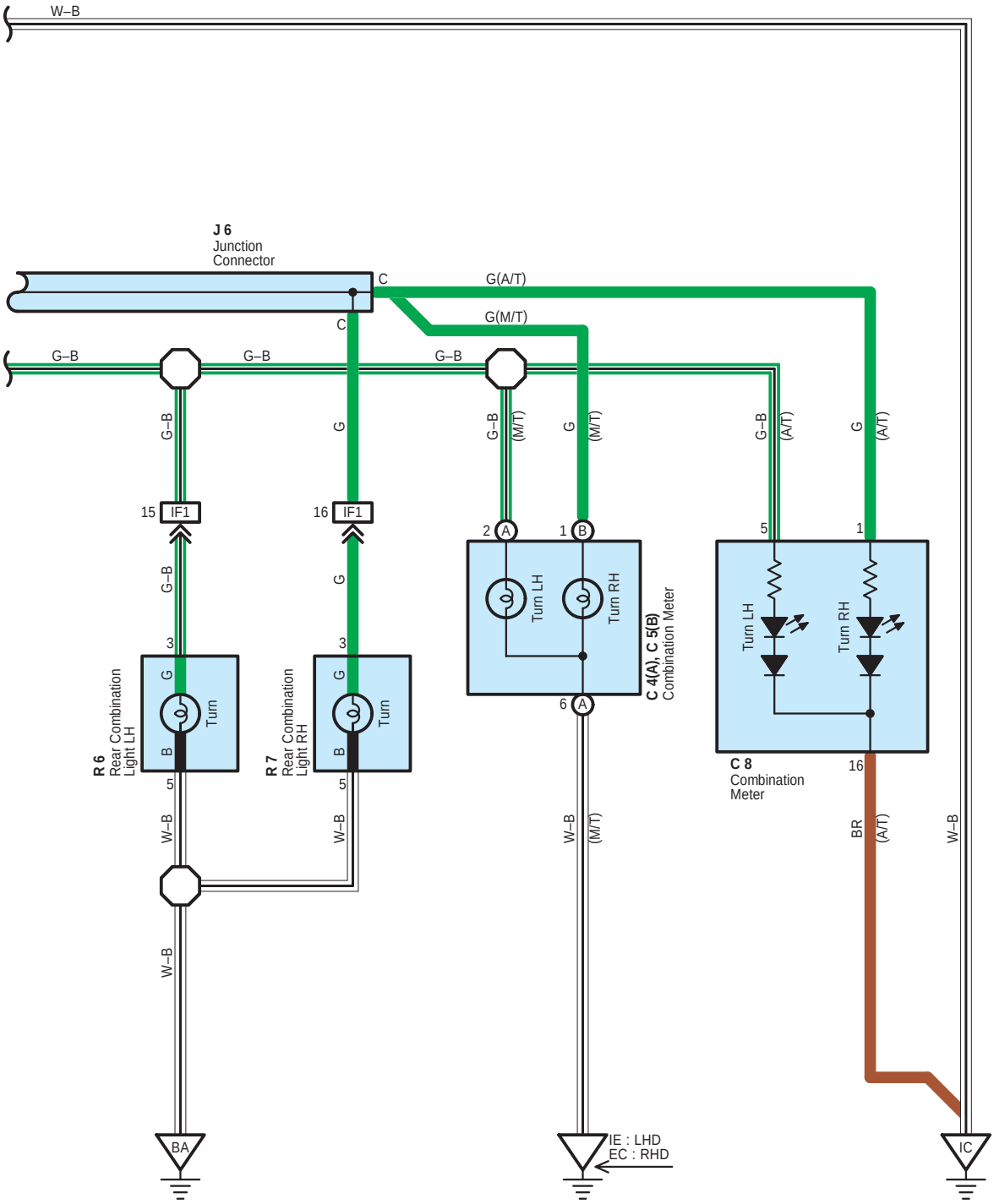

Turn Signal and Hazard Warning Light

: Parts Location

Code		See Page	Code		See Page	Code	See Page
C4	A	28 (LHD)	F6		34 (*4)	J4	29 (LHD)
		36 (*5)	F16		24 (*1)		37 (*5)
		38 (*6)			26 (*2)		39 (*6)
C5	B	28 (LHD)			32 (*3)	J6	29 (LHD)
		36 (*5)			34 (*4)		37 (*5)
		38 (*6)	F17		24 (*1)		39 (*6)
C8		28 (LHD)			26 (*2)	J8	29 (LHD)
		38 (*6)			32 (*3)		37 (*5)
F5		24 (*1)			34 (*4)	R6	31 (LHD)
		26 (*2)	H7		28 (LHD)		41 (RHD)
		32 (*3)			36 (*5)	R7	31 (LHD)
		34 (*4)			38 (*6)		41 (RHD)
F6		24 (*1)	H8	A	28 (LHD)	T2	29 (LHD)
		26 (*2)		B	36 (*5)		37 (*5)
		32 (*3)			38 (*6)		39 (*6)

: Relay Blocks

Code	See Page	Relay Blocks (Relay Block Location)
2	23 (LHD)	Fuse Block (Left Kick Panel)
	23 (RHD)	Fuse Block (Right Kick Panel)

: Connector Joining Wire Harness and Wire Harness

Code	See Page	Joining Wire Harness and Wire Harness (Connector Location)
ID1	44 (LHD)	Engine Room Main Wire and Instrument Panel Wire (Right Kick Panel)
	48 (*5)	Engine Room Main Wire and Instrument Panel Wire (Cowl Side Panel RH)
	49 (*6)	
IF1	44 (LHD)	Instrument Panel Wire and Floor Wire (Left Kick Panel)
	48 (*5)	Instrument Panel Wire and Floor Wire (Right Kick Panel)
	49 (*6)	

: Ground Points

Code	See Page	Ground Points Location
EA	42 (*1)	Right Fender Apron
	43 (*2)	
	46 (*3)	
	47 (*4)	
EC	46 (*3)	Left Fender Apron
	47 (*4)	
IA	44 (LHD)	Right Kick Panel
	48 (*5)	Left Kick Panel
	49 (*6)	
IB	44 (LHD)	Cowl Side Panel RH
	48 (*5)	
	49 (*6)	
IC	44 (LHD)	Cowl Side Panel LH
	48 (*5)	Right Kick Panel
	49 (*6)	
IE	44 (LHD)	Cowl Side Panel LH
BA	45 (LHD)	Rear Quarter Panel RH
	50 (RHD)	

* 1 : LHD 3SZ–VE * 2 : LHD K3–VE * 3 : RHD 3SZ–VE * 4 : RHD K3–VE * 5 : RHD w/ Heater * 6 : RHD w/o Heater